FEDERAL SIGNAL CORPORATION

Vibratone® Bell Assemblies

Models 504WB and 506WB

GONG, MECHANISM, AND BACK BOX IN ONE ASSEMBLY

- Available in 120VAC
- Four-inch or six-inch gong
- Four-inch gong produces 98dBa @ 10' (107dBa @ 1m)
- Six-inch gong produces 100dBa @ 10' (109dBa @ 1m)
- Type 3R enclosure
- UL and cUL Listed, CSA Certified and FM Approved

Federal Signal's Vibratone® Bells Models 504WB and 506WB are completely assembled and include the gong, vibrating AC mechanism, and the gasketed back box. These assemblies feature heavy duty, industrial grade housings and powder-coat paint treatments for added durability and performance.

These bells are offered in a 120VAC version.

The four inch, heavy duty gong, produces 98dBa @ 10' (107dBa @ 1m). The six inch heavy duty gong produces 100dBa @ 10' (109dBa @ 1m). Vibratone gongs are tempered to give them superior output and long lasting durability.

The Models 504WB and 506WB both contain internal terminal blocks which simplifies installation. This method also allows for an uninterrupted, single run of wiring.

These bells are UL and cUL Listed, CSA Certified and FM Approved. The entire assembly is rated for Type 3R.

Model	Operating Voltage	Current	Decibels @ 10'	Decibels @ 1m
504WB-120	120VAC	0.08 amps	98	107
506WB-120	120VAC	0.08 amps	100	109

5 yr FEDERAL SIGNAL WARRANTY

VIBRATONE® BELL ASSEMBLIES (504WB/506WB)

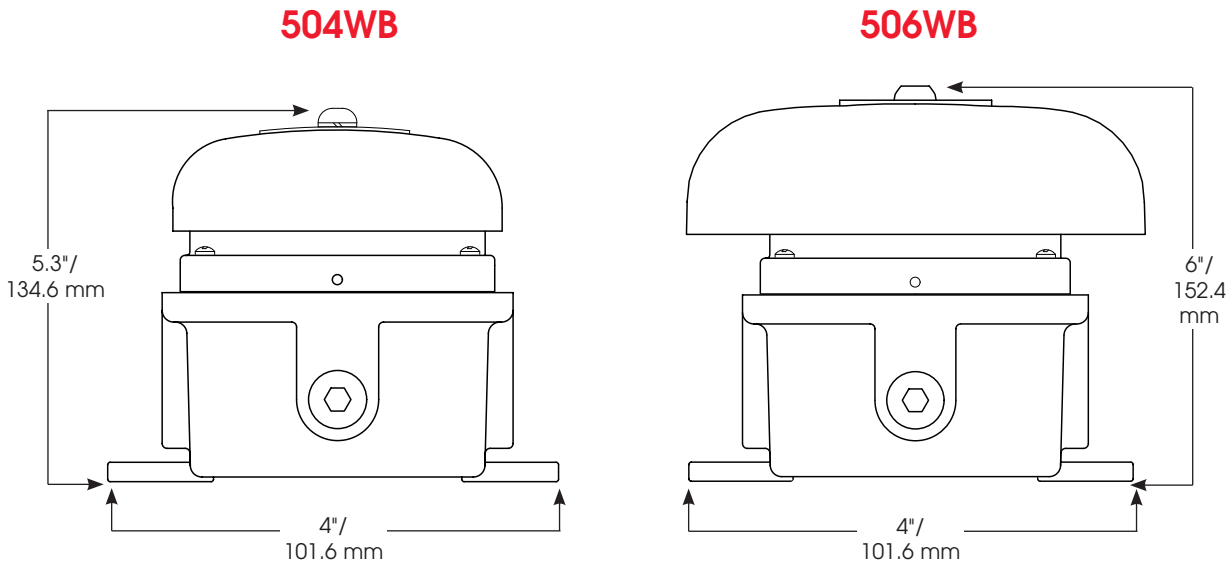

SPECIFICATIONS

Operating Temperature:	-31°F to 150°F	-35°C to 66°C
Net Weight:		
Model 504	1.05 lbs.	0.48 kg
Model 506	2.5 lbs.	1.13 kg
Shipping Weight:		
Model 504	1.65 lbs.	0.75 kg
Model 506	3.0 lbs.	1.36 kg
Height:		
Model 504	5.3"	134.6 mm
Model 506	6.0"	152.4 mm
Width:		
Model 504	5.3"	134.6 mm
Model 506	6.0"	152.4 mm
Depth:		
Model 504	4.0"	101.6 mm
Model 506	4.0"	101.6 mm

HOW TO ORDER

- Specify model and voltage
- Please refer to Model Number Index 504WB/506WB beginning on page 375